Compatible UV Lamp	Length*
6030D(T)	555
6040D(T)	810
6050D(T)	970

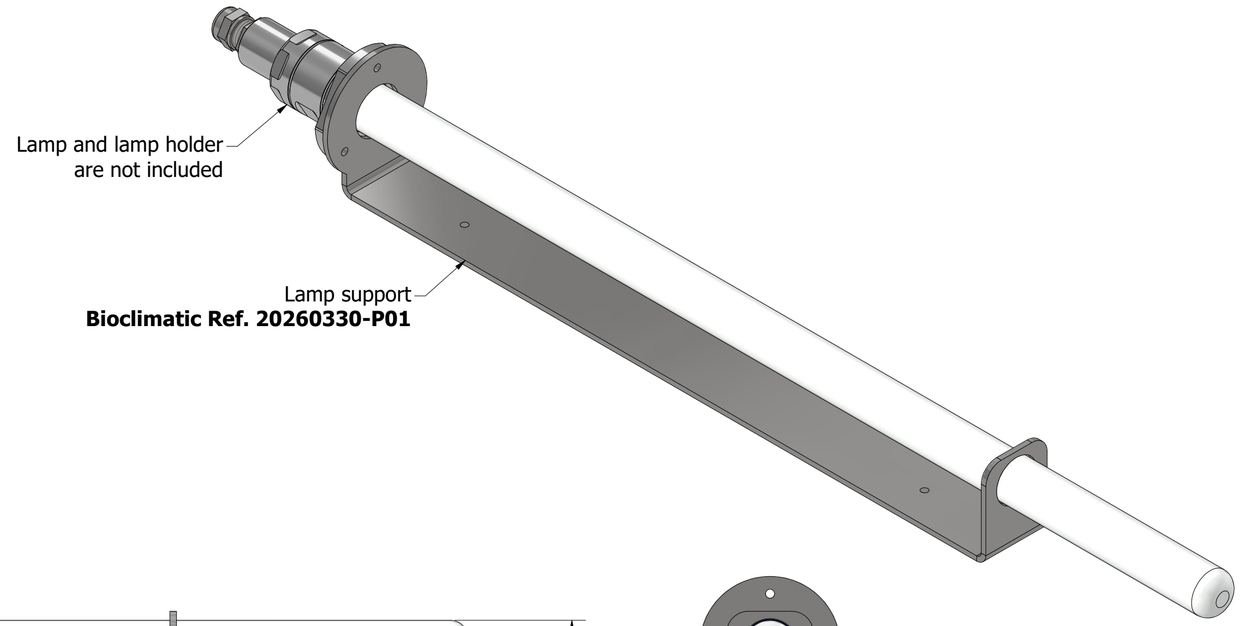

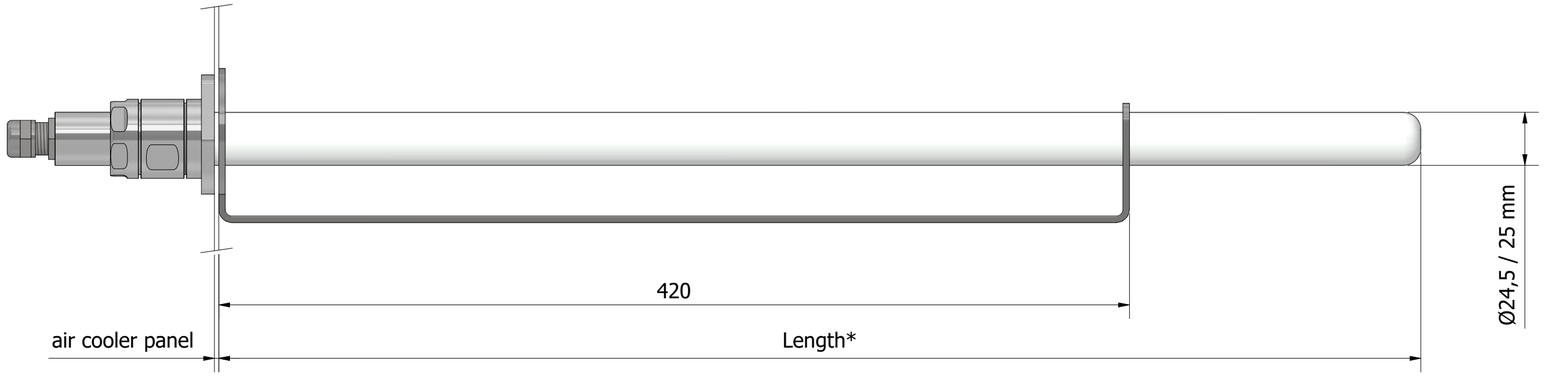

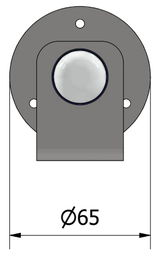

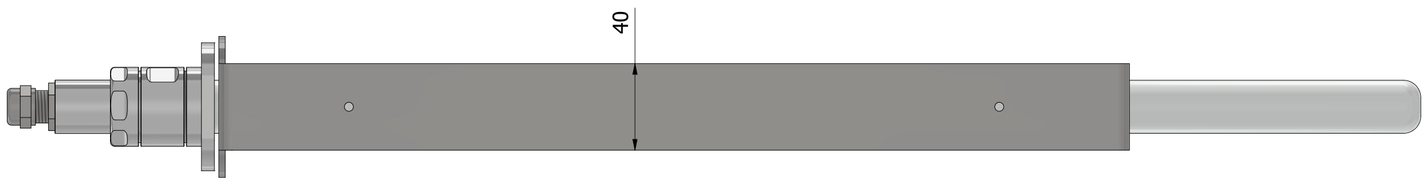

UVEMI UVC EQUIPMENT

bioclimatic
***Bio*climatic B.V.**
Luzernestraat 16
2153 GN Nieuw-Vennep
The Netherlands
tel. +31 (0) 252 626962
email: info@bioclimatic.nl

EQUIPMENT	LS	REVISION:	00	SHEETNR.	1 /1
DESCRIPTION	Lamp support for air coolers	STATUS:	For information	DRAWINGNR.	20260330-A01
		Material:	Stainless steel 304	PRODUCTNR.	2762

THIS DOCUMENT IS PROPERTY OF Bioclimatic B.V.
NO PART MAY BE REPRODUCED OR PUBLISHED WITHOUT WRITTEN PERMISSION OF THE OWNER